# Polo

## Current Flow Diagram

No. 9 / 2

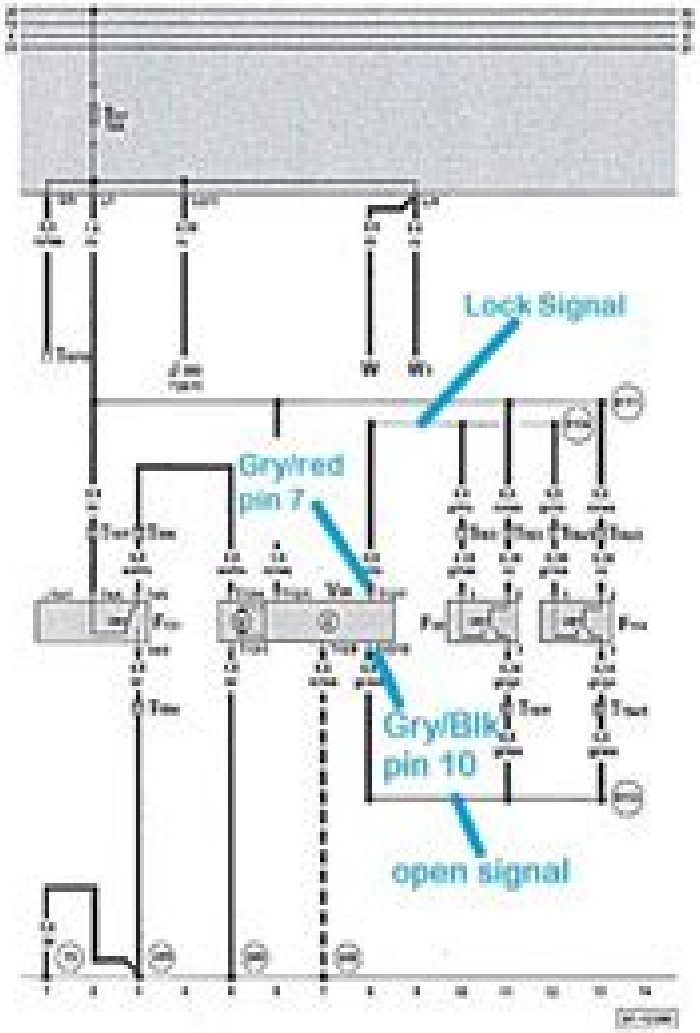


**Pump with control unit for central locking, central locking switch, central locking actuators**

- F59 - Central locking switch (driver's side)
- F114 - Central locking switch (front passenger's side)
- F131 - Central locking actuator, front left
- J285 - Control unit with display in dash panel insert
- T4 - 4-pin connector, on central locking positioner
- T12 - 12-pin connector, on central locking control unit
- T16 - 16-pin connector, behind shelf driver's side, - Self-diagnosis connection for V.A.G 1551 -
- T18 - 18-pin connector, left on lower A-pillar
- T18a - 18-pin connector, right on lower A-pillar
- T28 - 28-pin connector, on dash panel insert
- V69 - Central locking pump with control unit
- W - Interior light, front
- W3 - Luggage compartment light
- 75 - Earth point, rear pillar, right
- 240 - Earth connection -2-, in interior wiring harness
- B111 - Positive connection -1- (30a), in interior wiring harness
- B133 - Connection (central locking open), in interior wiring harness
- B134 - Connection (central locking closed), in interior wiring harness
- — - Cut through for single door opening function

ws = white
sw = black
ro = red
rt = red
br = brown
gn = green
bl = blue
gr = grey
li = purple
vi = purple
ge = yellow
or = orange
rs = pink

# Polo 6n Central Locking Wire Guide

Yicheng Fang

**Polo 6n Central Locking Wire Guide:**

Getting the books **Polo 6n Central Locking Wire Guide** now is not type of inspiring means. You could not unaided going like ebook hoard or library or borrowing from your links to admission them. This is an enormously easy means to specifically get guide by on-line. This online message Polo 6n Central Locking Wire Guide can be one of the options to accompany you as soon as having new time.

It will not waste your time. give a positive response me, the e-book will definitely impression you extra issue to read. Just invest little time to entrance this on-line notice **Polo 6n Central Locking Wire Guide** as skillfully as evaluation them wherever you are now.

https://socketapi.adit.com/data/book-search/HomePages/fundamentals%20of%20finance%20management%20ramesh%20rao%20solutions.pdf

**Table of Contents Polo 6n Central Locking Wire Guide**


1. Understanding the eBook Polo 6n Central Locking Wire Guide
    - The Rise of Digital Reading Polo 6n Central Locking Wire Guide
    - Advantages of eBooks Over Traditional Books
2. Identifying Polo 6n Central Locking Wire Guide
    - Exploring Different Genres
    - Considering Fiction vs. Non-Fiction
    - Determining Your Reading Goals
3. Choosing the Right eBook Platform
    - Popular eBook Platforms
    - Features to Look for in an Polo 6n Central Locking Wire Guide
    - User-Friendly Interface
4. Exploring eBook Recommendations from Polo 6n Central Locking Wire Guide
    - Personalized Recommendations
    - Polo 6n Central Locking Wire Guide User Reviews and Ratings

- Polo 6n Central Locking Wire Guide and Bestseller Lists

5. Accessing Polo 6n Central Locking Wire Guide Free and Paid eBooks
   - Polo 6n Central Locking Wire Guide Public Domain eBooks
   - Polo 6n Central Locking Wire Guide eBook Subscription Services
   - Polo 6n Central Locking Wire Guide Budget-Friendly Options
6. Navigating Polo 6n Central Locking Wire Guide eBook Formats
   - ePub, PDF, MOBI, and More
   - Polo 6n Central Locking Wire Guide Compatibility with Devices
   - Polo 6n Central Locking Wire Guide Enhanced eBook Features
7. Enhancing Your Reading Experience
   - Adjustable Fonts and Text Sizes of Polo 6n Central Locking Wire Guide
   - Highlighting and Note-Taking Polo 6n Central Locking Wire Guide
   - Interactive Elements Polo 6n Central Locking Wire Guide
8. Staying Engaged with Polo 6n Central Locking Wire Guide
   - Joining Online Reading Communities
   - Participating in Virtual Book Clubs
   - Following Authors and Publishers Polo 6n Central Locking Wire Guide
9. Balancing eBooks and Physical Books Polo 6n Central Locking Wire Guide
   - Benefits of a Digital Library
   - Creating a Diverse Reading Collection Polo 6n Central Locking Wire Guide
10. Overcoming Reading Challenges
    - Dealing with Digital Eye Strain
    - Minimizing Distractions
    - Managing Screen Time
11. Cultivating a Reading Routine Polo 6n Central Locking Wire Guide
    - Setting Reading Goals Polo 6n Central Locking Wire Guide
    - Carving Out Dedicated Reading Time
12. Sourcing Reliable Information of Polo 6n Central Locking Wire Guide
    - Fact-Checking eBook Content of Polo 6n Central Locking Wire Guide
    - Distinguishing Credible Sources

13. Promoting Lifelong Learning
    - Utilizing eBooks for Skill Development
    - Exploring Educational eBooks
14. Embracing eBook Trends
    - Integration of Multimedia Elements
    - Interactive and Gamified eBooks

**Polo 6n Central Locking Wire Guide Introduction**

Free PDF Books and Manuals for Download: Unlocking Knowledge at Your Fingertips In todays fast-paced digital age, obtaining valuable knowledge has become easier than ever. Thanks to the internet, a vast array of books and manuals are now available for free download in PDF format. Whether you are a student, professional, or simply an avid reader, this treasure trove of downloadable resources offers a wealth of information, conveniently accessible anytime, anywhere. The advent of online libraries and platforms dedicated to sharing knowledge has revolutionized the way we consume information. No longer confined to physical libraries or bookstores, readers can now access an extensive collection of digital books and manuals with just a few clicks. These resources, available in PDF, Microsoft Word, and PowerPoint formats, cater to a wide range of interests, including literature, technology, science, history, and much more. One notable platform where you can explore and download free Polo 6n Central Locking Wire Guide PDF books and manuals is the internets largest free library. Hosted online, this catalog compiles a vast assortment of documents, making it a veritable goldmine of knowledge. With its easy-to-use website interface and customizable PDF generator, this platform offers a user-friendly experience, allowing individuals to effortlessly navigate and access the information they seek. The availability of free PDF books and manuals on this platform demonstrates its commitment to democratizing education and empowering individuals with the tools needed to succeed in their chosen fields. It allows anyone, regardless of their background or financial limitations, to expand their horizons and gain insights from experts in various disciplines. One of the most significant advantages of downloading PDF books and manuals lies in their portability. Unlike physical copies, digital books can be stored and carried on a single device, such as a tablet or smartphone, saving valuable space and weight. This convenience makes it possible for readers to have their entire library at their fingertips, whether they are commuting, traveling, or simply enjoying a lazy afternoon at home. Additionally, digital files are easily searchable, enabling readers to locate specific information within seconds. With a few keystrokes, users can search for keywords, topics, or phrases, making research and finding relevant information a breeze. This efficiency saves time and effort, streamlining the learning process and allowing individuals to focus on extracting the information they need. Furthermore, the availability of free PDF books and manuals fosters a culture of continuous learning.

By removing financial barriers, more people can access educational resources and pursue lifelong learning, contributing to personal growth and professional development. This democratization of knowledge promotes intellectual curiosity and empowers individuals to become lifelong learners, promoting progress and innovation in various fields. It is worth noting that while accessing free Polo 6n Central Locking Wire Guide PDF books and manuals is convenient and cost-effective, it is vital to respect copyright laws and intellectual property rights. Platforms offering free downloads often operate within legal boundaries, ensuring that the materials they provide are either in the public domain or authorized for distribution. By adhering to copyright laws, users can enjoy the benefits of free access to knowledge while supporting the authors and publishers who make these resources available. In conclusion, the availability of Polo 6n Central Locking Wire Guide free PDF books and manuals for download has revolutionized the way we access and consume knowledge. With just a few clicks, individuals can explore a vast collection of resources across different disciplines, all free of charge. This accessibility empowers individuals to become lifelong learners, contributing to personal growth, professional development, and the advancement of society as a whole. So why not unlock a world of knowledge today? Start exploring the vast sea of free PDF books and manuals waiting to be discovered right at your fingertips.

## FAQs About Polo 6n Central Locking Wire Guide Books

How do I know which eBook platform is the best for me? Finding the best eBook platform depends on your reading preferences and device compatibility. Research different platforms, read user reviews, and explore their features before making a choice. Are free eBooks of good quality? Yes, many reputable platforms offer high-quality free eBooks, including classics and public domain works. However, make sure to verify the source to ensure the eBook credibility. Can I read eBooks without an eReader? Absolutely! Most eBook platforms offer webbased readers or mobile apps that allow you to read eBooks on your computer, tablet, or smartphone. How do I avoid digital eye strain while reading eBooks? To prevent digital eye strain, take regular breaks, adjust the font size and background color, and ensure proper lighting while reading eBooks. What the advantage of interactive eBooks? Interactive eBooks incorporate multimedia elements, quizzes, and activities, enhancing the reader engagement and providing a more immersive learning experience. Polo 6n Central Locking Wire Guide is one of the best book in our library for free trial. We provide copy of Polo 6n Central Locking Wire Guide in digital format, so the resources that you find are reliable. There are also many Ebooks of related with Polo 6n Central Locking Wire Guide. Where to download Polo 6n Central Locking Wire Guide online for free? Are you looking for Polo 6n Central Locking Wire Guide PDF? This is definitely going to save you time and cash in something you should think about. If you trying to find then search around for online. Without a doubt there are numerous these available and many of them have the freedom. However

without doubt you receive whatever you purchase. An alternate way to get ideas is always to check another Polo 6n Central Locking Wire Guide. This method for see exactly what may be included and adopt these ideas to your book. This site will almost certainly help you save time and effort, money and stress. If you are looking for free books then you really should consider finding to assist you try this. Several of Polo 6n Central Locking Wire Guide are for sale to free while some are payable. If you arent sure if the books you would like to download works with for usage along with your computer, it is possible to download free trials. The free guides make it easy for someone to free access online library for download books to your device. You can get free download on free trial for lots of books categories. Our library is the biggest of these that have literally hundreds of thousands of different products categories represented. You will also see that there are specific sites catered to different product types or categories, brands or niches related with Polo 6n Central Locking Wire Guide. So depending on what exactly you are searching, you will be able to choose e books to suit your own need. Need to access completely for Campbell Biology Seventh Edition book? Access Ebook without any digging. And by having access to our ebook online or by storing it on your computer, you have convenient answers with Polo 6n Central Locking Wire Guide To get started finding Polo 6n Central Locking Wire Guide, you are right to find our website which has a comprehensive collection of books online. Our library is the biggest of these that have literally hundreds of thousands of different products represented. You will also see that there are specific sites catered to different categories or niches related with Polo 6n Central Locking Wire Guide So depending on what exactly you are searching, you will be able tochoose ebook to suit your own need. Thank you for reading Polo 6n Central Locking Wire Guide. Maybe you have knowledge that, people have search numerous times for their favorite readings like this Polo 6n Central Locking Wire Guide, but end up in harmful downloads. Rather than reading a good book with a cup of coffee in the afternoon, instead they juggled with some harmful bugs inside their laptop. Polo 6n Central Locking Wire Guide is available in our book collection an online access to it is set as public so you can download it instantly. Our digital library spans in multiple locations, allowing you to get the most less latency time to download any of our books like this one. Merely said, Polo 6n Central Locking Wire Guide is universally compatible with any devices to read.

### Find Polo 6n Central Locking Wire Guide :

*fundamentals of finance management ramesh rao solutions*
~~fundamentals of power electronics solution manual erickson~~
*general organic biological chemistry study guide with answers to selected problems paperback 2006 4th edition study guide*
**gautengse departement van onderwys provinsiale eksamen**
~~fpga implementations of neural networks~~

**garp erp practice exam**
~~fundamentals of general topology problems and exercises~~
*fundamentals of thermodynamics van wylen 6th edition solution*
**gas turbine engine irwin treager**
**frameless high torque motors magnetic**
fundamentals of database systems elmasri navathe 6th edition download
gcse english literature poetry anthology one themes love
fundamentals of engineering thermodynamics 7th edition solutions manual scribd
**gas dynamics 3rd edition solution**
~~from fire and fury to political firestorm the new york~~

**Polo 6n Central Locking Wire Guide :**

*best california wine regions backroads* - Jan 18 2022
web oct 30 2023 there s history around every curve on the back roads between los angeles and los olivos a 100 mile route that meanders through mountains canyons and star
backroads of the california wine country your guid pdf - Nov 15 2021

**travel california wine country s back roads morning ag clips** - Feb 16 2022
web for the most authentic california wine country experience we recommend taking a trip straight to the source whether by car bike or organized backroads bike tour visiting a
**backroads of the california wine country your guid db csda** - Apr 20 2022
web backroads of the california wine country your guide to the wine country s most scenic backroad adventures isbn 9780760325414 0760325413 by misuraca karen
**backroads of the california wine country your guide to the** - Jan 30 2023
web apr 25 2006 since the 1970s the california wine country has been among the world s premier wine growing regions and california wines hold their own against the best of
**backroads of the california wine country your guide to** - May 02 2023
web wine grapes have been cultivated in california s verdant valleys since the days of the spanish backroads of the california wine country your guide to the wine
**buy backroads of the california wine country your guide to the** - May 22 2022

web backroads of the california wine country weekends for two in the wine country backroad wineries of northern california quick escapes from san francisco forty

*backroads of the california wine country your guide to the wine* - Mar 20 2022

web jun 4 2019 san francisco california is home to dozens of distinct wine regions including some of the world s most famous destinations but hidden among even the high

backroads of the california wine country your guide to the wine - Apr 01 2023

web apr 25 2006 backroads of the california wine country your guide to the wine country s most scenic backroad adventures backroads of karen misuraca

*backroads of the california wine country your guide to the wine* - Jun 03 2023

web may 5 2006 backroads of the california wine country your guide to the wine country s most scenic backroad adventures misuraca karen crabbe gary

**backroads of the california wine country your guide to the wine** - Sep 25 2022

web buy backroads of the california wine country your guide to the wine country s most scenic backroad adventures backroads of by karen misuraca 2006 paperback by

*backroads of the california wine country your guide to the wine* - Oct 07 2023

web may 5 2006 backroads of the california wine country your guide to the wine country s most scenic backroad adventures misuraca karen crabbe gary 9780760325414 amazon com books books travel united states buy used 6 05

*backroads of the california wine country your guide to the wine* - Jul 04 2023

web a tour through the wine country is a tour through the history of california a journey back to the old west a wilderness adventure an encounter with american literary icons and

*backroads of the california wine country your guide to the wine* - Aug 05 2023

web the mystique and history of california s wine regions are captured in full glory in backroads of the california wine country from the misty northern appellations of

backroads of the california wine country your guide to the wine - Sep 06 2023

web the northern counties over hills and dales the redwood valley mendocino county roundabout anderson valley along the navarro hopland and the mcdowell valley

**backroads of the california wine country your guide to the wine** - Feb 28 2023

web buy backroads of the california wine country your guide to the wine country s most scenic backroad adventures by karen misuraca gary crabbe photographer online at

backroads of the california wine country your guide to the wine - Jul 24 2022

web buy backroads of the california wine country your guide to the wine country s most scenic backroad adventures by karen misuraca gary crabbe photographer online at

**southern california beyond the freeway the new york times** - Dec 17 2021

web and install backroads of the california wine country your guid fittingly simple backroads of the california wine country your guid 2023 04 19 grace eaton

backroads of the california wine country your guide to the wine - Aug 25 2022

web may 5 2006 backroads of the california wine country your guide to the wine country s most scenic backroad adventures by karen isbn 0760325413 isbn13

*backroads of the california wine country your guide to the wine* - Nov 27 2022

web backroads of the california wine country your guide to the wine country s most scenic backroad adventures misuraca karen crabbe gary amazon com au books

**backroads of the california wine country your guide to the wine** - Jun 22 2022

web amazon in buy backroads of the california wine country your guide to the wine country s most scenic backroad adventures book online at best prices in india on

**backroads of the california wine country your guide** - Dec 29 2022

web a tour through the wine country is a tour through the history of california a journey back to the old west a wilderness adventure an encounter with american literary icons and

**amazon com backroads of the california wine** - Oct 27 2022

web buy backroads of the california wine country your guide to the wine country s most scenic backroad adventures by misuraca karen crabbe gary online on amazon ae at

**programming microsoft windows with microsoft visual basic** - Jul 25 2022

web programming microsoft windows with microsoft visual basic net core reference bookreader item preview programming microsoft windows with microsoft visual basic net core reference by petzold charles 1953 publication date 2003 topics

*get started visual basic microsoft learn* - Sep 07 2023

web sep 21 2022 get started with visual basic and net core build a hello world application with net core in visual studio build a class library with net standard in visual studio additional information what s new for visual basic lists new features in each of the versions of visual basic net

**visual basic for applications wikipedia** - Jan 19 2022

web visual basic for applications visual basic for applications vba is an implementation of microsoft s event driven programming language visual basic 6 0 built into most desktop microsoft office applications although based on pre net visual

basic which is no longer supported or updated by microsoft the vba implementation in office

**movie maker video editor official app in the microsoft store** - Mar 09 2021

web movie maker video editor is the best video editing tool with full hd export and no watermark free and easy to use video editor and movie maker now with high quality full hd support works on both windows 10 and windows 11 movie maker video editor is the best app for editing videos or creating videos from your photos video clips and

**what is visual basic used for codecademy blog** - Apr 21 2022

web mar 9 2023 visual basic vb is an object oriented programming language oop introduced by microsoft in 1991 it derives from an earlier programming language called basic which stands for beginners all purpose symbolic instruction code vb was designed to enable rapid application development rad of graphical user interface

*programming guide visual basic microsoft learn* - Jun 04 2023

web sep 15 2021 as with any modern programming language visual basic supports many common programming constructs and language elements this guide describes all the major elements of programming with visual basic

*programming microsoft windows with microsoft visual basic net* - Aug 06 2023

web the book is a tutorial for programmers wishing to write applications for windows using visual basic net and the windows forms class library windows forms is part of the microsoft net framework some knowledge of earlier versions of visual basic is required some familiarity with object oriented programming is helpful but not necessary

**visual studio ide with net develop any app using c f vb** - Jan 31 2023

web download visual studio for windows and choose the tools you need community 2022 professional 2022 enterprise 2022 c and visual basic productive multi purpose type safe object oriented open source c and visual basic are programming languages designed for creating a variety of applications that run on net

*what s new with identity in net 8 devblogs microsoft com* - Jun 11 2021

web nov 3 2023 the new identity features in net 8 make it easier than ever to secure your applications if your requirements are simple you can now add authentication and authorization to your app with a few lines of code the new apis make it possible to secure your web api endpoints with cookie based authentication and authorization

tutorial create a windows forms app with visual basic visual - Apr 02 2023

web feb 27 2023 open visual studio on the start window choose create a new project on the create a new projectwindow select the windows forms app net framework template for visual basic you can refine your search to quickly get to the template you want for example enter windows forms appin the search box

*getting started with visual studio* - Dec 30 2022

web visual studio is a powerful ide for python language through its built in python development and data science workloads

**Polo 6n Central Locking Wire Guide**

python is a popular easy to learn free to use programming language with many free libraries in visual studio use python to build web applications web services desktop apps scripting and scientific computing

*a visual basic tutorial for beginners getting started* - Mar 21 2022

web visual basic is an interesting computer programming language due to the simplicity that it has many programmers who develop for windows use visual basic since it helps to streamline the programming process visual basic like many other programs has programming elements that you will learn to use in order to speak the programming

*microsoft visual basic download* - Nov 16 2021

web may 24 2023 development it microsoft visual basic for windows free in english v 2022 17 5 3 3 5570 security status free download for windows softonic review cathy buggsupdated 5 months ago beginner friendly coding environment visual basic is a programming language that comes with an integrated development environment

programming microsoft windows with microsoft visual basic net - May 03 2023

web aug 31 2002 the top selling author shows developers how to use visual basic net to get the most out of windows forms the next generation windows programming class library 75 word description look it up in petzold remains the last word on

*microsoft basic wikipedia* - Dec 18 2021

web the release of visual basic reboosted its popularity and it remains in wide use on microsoft windows platforms in its most recent incarnation visual basic net altair basic and early microcomputers

下载 visual studio tools 免费安装 windows mac linux - Apr 09 2021

web visual studio code 可在 windows macos 和 linux 上运行的独立源代码编辑器 java 和 web 开发人员的理想选择 包含大量扩展 支持几乎任何编程语言 免费下载 windows x64 用户安装程序 macos universal打包 linux x64 deb linux x64 rpm 更多信息

free microsoft certification for students - Oct 16 2021

web jul 28 2022 the first place to start your certification is microsoft learn microsoft learn contains a collection of learning paths and modules to skill you up on different technology areas as well as soft skills the platform is comprehensive and will get you well on your way to certification once on the landing page click sign in the top right and sign

visual studio community 2022 official app in the microsoft store - Aug 26 2022

web visual studio community 2022 is a fully featured extensible free integrated development environment for creating modern applications for android ios windows linux as well as web applications cloud services and games code in c visual basic f c and more leverage built in tools for designing editing analyzing debugging testing and

*programming microsoft windows with microsoft visual basic net* - Sep 26 2022

web 25 word description the top selling author shows developers how to use visual basic net to get the most out of windows forms the next generation windows programming class library 75 word description look it up in petzold remains the last word

on windows development in this microsoft net ready guide to the state of the art
*programming microsoft visual basic net google books* - Feb 17 2022
web programming microsoft visual basic net francesco balena google books francesco balena microsoft press 2002 computers 1576 pages accelerate your productivity with visual
**what s new for visual basic in visual studio 2022 net blog** - Oct 28 2022
web nov 8 2021 overall visual studio 2022 has a new look with the new cascadia font and updated icons if you have customized your font you may need to explicitly set your font to cascadia you have several cascadia choices with different weights and two styles mono and code cascadia mono is the default
*tutorial create a simple visual basic vb console app* - Mar 01 2023
web oct 31 2023 open visual studio on the start window choose create a new project in the create a new project window choose visual basic from the language list next choose windows from the platform list and console from the project types list after you apply the language platform and project type filters choose the console app template
visual basic development with visual studio visual studio windows - Oct 08 2023
web tutorial open code from a repo write and edit code compile and build debug your code test your code how to guide access data create visual basic apps by using visual studio
how to download vba support library for wps office a - Aug 14 2021
web nov 1 2023 to open the visual basic editor click on the developer tab and then click on the visual basic button the visual basic editor the vba support library functions and procedures are organized into categories to see a list of the categories click on the imports folder in the project explorer window
*microsoft visual basic free download windows version* - Sep 14 2021
web may 24 2023 download of microsoft visual basic 16 9 was on the developer s website when we last checked we cannot confirm if there is a free download of this software available some of the software aliases include visual basic sp6 4 visual basic microsoft visual basic 2005 the software relates to development tools
*microsoft visual basic download* - Jul 13 2021
web microsoft visual basic programming software that allows users to create graphics for windows 6 2 3019 votes category development editors program license free version 2022 17 5 size 2 70 mb works under windows 7
visual basic docs get started tutorials reference microsoft learn - Jul 05 2023
web learn net visual basic documentation visual basic is an object oriented programming language developed by microsoft using visual basic makes it fast and easy to create type safe net apps get started download the net sdk get started create a net core console application using visual studio

**visual studio community 2019 official app in the microsoft store** - May 23 2022
web visual studio community 2019 is a fully featured extensible free integrated development environment for creating modern applications for android ios windows linux as well as web applications cloud services and games code in c visual basic f c and more leverage built in tools for designing editing analyzing debugging testing and
**microsof visual basic not installed my pc** - May 11 2021
web nov 6 2023 i m microsoft user like you i can understand you are facing some issues with visual basic please note that vb is end of support and moved to visual studio net or net framework
**programming microsoft windows with visual basic** - Jun 23 2022
web you will leave having written your first visual basic program course objectives understand the benefits of using microsoft visual basic 6 as an application tool understand the visual basic event driven programming concepts terminology and available tools learn the fundamentals of designing implementing and distributing a
tutorial create a wpf application with visual basic - Nov 28 2022
web nov 1 2022 in this tutorial create a windows desktop net app in visual basic with visual studio using the windows presentation foundation wpf ui framework tutorial create an app with windows presentation foundation with visual basic visual studio windows microsoft learn
**a wall or a road a remote sensing based investigation of** - Feb 21 2023
web oct 25 2023 background in his aerial survey poidebard reference poidebard 1934 set out to search for evidence of roman period fortifications along the eastern frontier of the empire he focused on a route stretching from borsa on the jordanian border north through palmyra and raqqa south east along the euphrates river to its confluence with the
**rome wikipedia** - Sep 30 2023
web rome is often referred to as the city of seven hills due to its geographic location and also as the eternal city rome is generally considered to be the cradle of western civilization and christian culture and the centre of the catholic
*experience rome lonely planet lazio italy europe* - Jan 23 2023
web rome lazio italy europe a heady mix of haunting ruins awe inspiring art and vibrant street life italy s hot blooded capital is one of the world s most romantic and charismatic cities start planning your trip
*who will astros pick to replace dusty baker evaluating the* - Dec 22 2022
web oct 26 2023 chandler rome is a staff writer for the athletic covering the houston astros before joining the athletic he covered the astros for five years at the houston chronicle
*what declassified cold war spy photos tell us about ancient rome* - Mar 25 2023
web oct 25 2023 in his landmark 1934 book la trace de rome dans le désert de syrie the remains of rome in the syrian

desert father poidebard identified the sites of 116 roman forts that he thought lay along

**excruciating hornet sting leaves rome dinner party guest on** - Jul 29 2023

web oct 29 2023 rome is a very dirty city with the worst management of urban waste there are open bins everywhere said lunerti on top of that the insects although big are slender enough to

**italian pregnant woman hurt by rottweiler dog s balcony fall in rome** - Jun 27 2023

web 2 days ago marie stevens was found dead at her home in holden road in brighton le sands on september 3 on august 18 the 40 year old was attacked by two rottweilers and bitten multiple times on her arms

**rome tourism and travel guide visitors travel guide** - May 27 2023

web with its unparalleled history rome is the third most visited city in europe and the fourteenth worldwide it attracts visitors from all over the world who are impatient to discover the city s impressive monuments and archaeological sites not to mention its renowned cuisine and its lively atmosphere

rome tv series 2005 2007 imdb - Aug 30 2023

web vorenus defense of caesar lands him in an unexpected position of power within rome meanwhile servilia hurls the final obstacle in her ambitious and complex revenge plan against atia with the defeat of the egyptian fleet at actium mark antony and cleopatra retreat to their palace and await their fate

**mary beard on homer tacitus and a neglected favorite by seneca** - Apr 25 2023

web 1 day ago the best selling scholar of ancient rome has a favorite mary beard and her book emperor of rome norton c robin cormack in her newest book emperor of rome ruling the ancient world