FAX NO.
(904) 641-1697

Coastal Industries Inc.

P.O BOX 16091
JACKSONVILLE, FLORIDA 32245

TELEPHONE NO.
(904) 642-3970

Paragon 3/16" Frameless Shower Door

(exploded view)

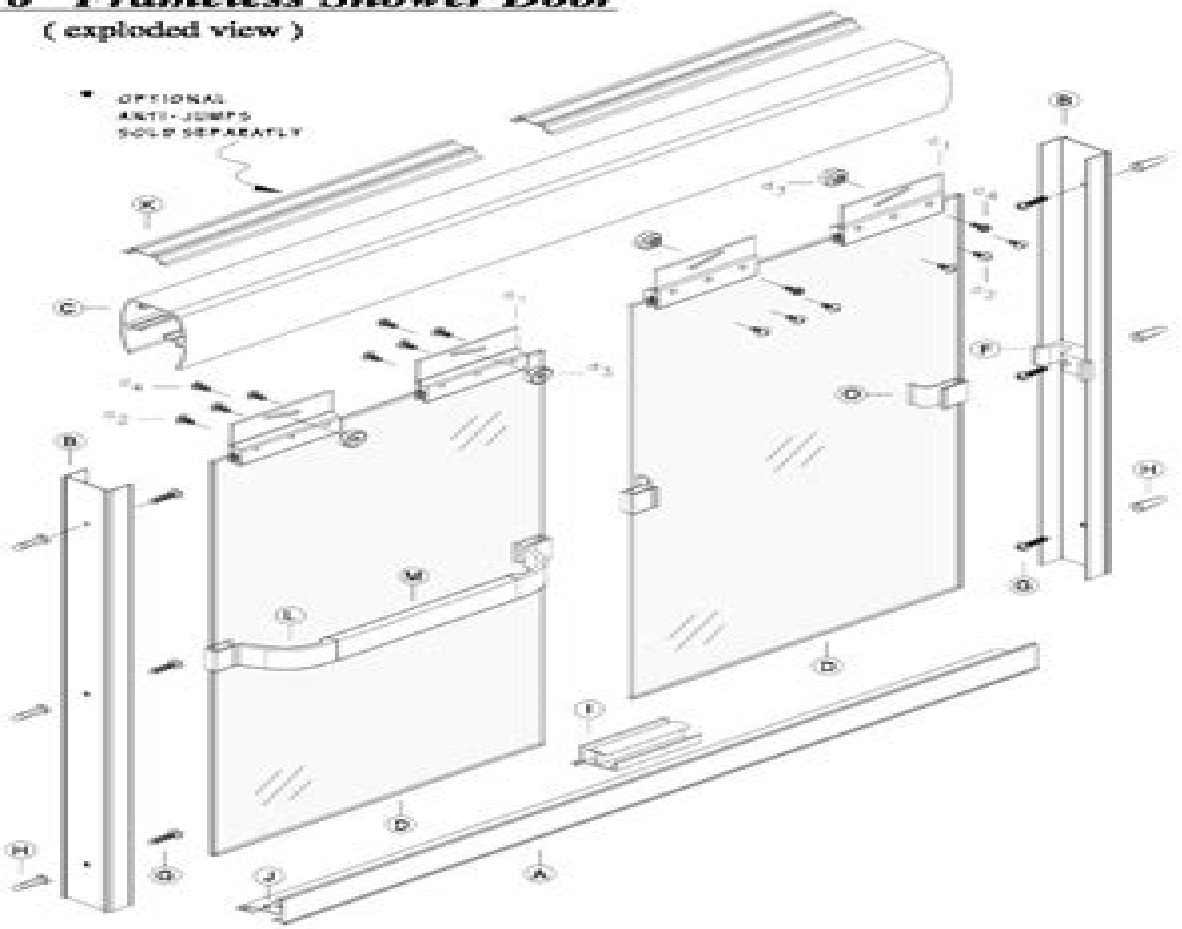

KEY LETTER	PART NUMBER	DESCRIPTION	QTY
A	492	SILL	1
B	126	WALL JAMB	1
C	938	HEADER	1
D	----	GLASS PANEL ASSEMBLY	2
d1	282 / 283	Hanger Bracket (installed)	2
d2	1012BHP	Hanger Bracket Screws (installed)	6
d3	PN193	Nylon Roller (installed)	2
d4	832HEX	Roller Screws (installed)	2

KEY LETTER	PART NUMBER	DESCRIPTION	QTY
E		(not used)	
F	5170	JAMB BUMPER	2
G	834G	INSTALLATION SCREWS	6
H	1329	PLASTIC SCREW ANCHOR	6
I	C483B	TRACK GUIDE	1
J	C484B	SILL SEAL VINYL	1
K	* 130	ANTI - JUMP (optional)	2
L	936	TOWEL BAR BRACKETS	2
M	21	TOWEL BAR	1
N	----	(designation not used)	–
O	937	DOOR PULLS	2
P	C964B	VINYL (door pulls and towel bar brackets)	4

PARAGON 3/16" FRAMELESS 2"PASS (2" TBAR) 11-04-08

Shower Door Installation Instructions

Jianjun Gao

Shower Door Installation Instructions:

This is likewise one of the factors by obtaining the soft documents of this **Shower Door Installation Instructions** by online. You might not require more get older to spend to go to the book commencement as skillfully as search for them. In some cases, you likewise accomplish not discover the publication Shower Door Installation Instructions that you are looking for. It will categorically squander the time.

However below, gone you visit this web page, it will be hence agreed simple to acquire as without difficulty as download lead Shower Door Installation Instructions

It will not acknowledge many get older as we run by before. You can pull off it though produce an effect something else at home and even in your workplace. correspondingly easy! So, are you question? Just exercise just what we present under as without difficulty as review **Shower Door Installation Instructions** what you behind to read!

https://socketapi.adit.com/results/book-search/default.aspx/12%20dodge%20ram%201500%20service%20manual.pdf

Table of Contents Shower Door Installation Instructions

1. Understanding the eBook Shower Door Installation Instructions
    - The Rise of Digital Reading Shower Door Installation Instructions
    - Advantages of eBooks Over Traditional Books
2. Identifying Shower Door Installation Instructions
    - Exploring Different Genres
    - Considering Fiction vs. Non-Fiction
    - Determining Your Reading Goals
3. Choosing the Right eBook Platform
    - Popular eBook Platforms
    - Features to Look for in an Shower Door Installation Instructions
    - User-Friendly Interface
4. Exploring eBook Recommendations from Shower Door Installation Instructions

- Personalized Recommendations
- Shower Door Installation Instructions User Reviews and Ratings
- Shower Door Installation Instructions and Bestseller Lists

5. Accessing Shower Door Installation Instructions Free and Paid eBooks
   - Shower Door Installation Instructions Public Domain eBooks
   - Shower Door Installation Instructions eBook Subscription Services
   - Shower Door Installation Instructions Budget-Friendly Options
6. Navigating Shower Door Installation Instructions eBook Formats
   - ePub, PDF, MOBI, and More
   - Shower Door Installation Instructions Compatibility with Devices
   - Shower Door Installation Instructions Enhanced eBook Features
7. Enhancing Your Reading Experience
   - Adjustable Fonts and Text Sizes of Shower Door Installation Instructions
   - Highlighting and Note-Taking Shower Door Installation Instructions
   - Interactive Elements Shower Door Installation Instructions
8. Staying Engaged with Shower Door Installation Instructions
   - Joining Online Reading Communities
   - Participating in Virtual Book Clubs
   - Following Authors and Publishers Shower Door Installation Instructions
9. Balancing eBooks and Physical Books Shower Door Installation Instructions
   - Benefits of a Digital Library
   - Creating a Diverse Reading Collection Shower Door Installation Instructions
10. Overcoming Reading Challenges
    - Dealing with Digital Eye Strain
    - Minimizing Distractions
    - Managing Screen Time
11. Cultivating a Reading Routine Shower Door Installation Instructions
    - Setting Reading Goals Shower Door Installation Instructions
    - Carving Out Dedicated Reading Time
12. Sourcing Reliable Information of Shower Door Installation Instructions

- Fact-Checking eBook Content of Shower Door Installation Instructions
- Distinguishing Credible Sources

13. Promoting Lifelong Learning
    - Utilizing eBooks for Skill Development
    - Exploring Educational eBooks
14. Embracing eBook Trends
    - Integration of Multimedia Elements
    - Interactive and Gamified eBooks

Shower Door Installation Instructions Introduction

Shower Door Installation Instructions Offers over 60,000 free eBooks, including many classics that are in the public domain. Open Library: Provides access to over 1 million free eBooks, including classic literature and contemporary works. Shower Door Installation Instructions Offers a vast collection of books, some of which are available for free as PDF downloads, particularly older books in the public domain. Shower Door Installation Instructions : This website hosts a vast collection of scientific articles, books, and textbooks. While it operates in a legal gray area due to copyright issues, its a popular resource for finding various publications. Internet Archive for Shower Door Installation Instructions : Has an extensive collection of digital content, including books, articles, videos, and more. It has a massive library of free downloadable books. Free-eBooks Shower Door Installation Instructions Offers a diverse range of free eBooks across various genres. Shower Door Installation Instructions Focuses mainly on educational books, textbooks, and business books. It offers free PDF downloads for educational purposes. Shower Door Installation Instructions Provides a large selection of free eBooks in different genres, which are available for download in various formats, including PDF. Finding specific Shower Door Installation Instructions, especially related to Shower Door Installation Instructions, might be challenging as theyre often artistic creations rather than practical blueprints. However, you can explore the following steps to search for or create your own Online Searches: Look for websites, forums, or blogs dedicated to Shower Door Installation Instructions, Sometimes enthusiasts share their designs or concepts in PDF format. Books and Magazines Some Shower Door Installation Instructions books or magazines might include. Look for these in online stores or libraries. Remember that while Shower Door Installation Instructions, sharing copyrighted material without permission is not legal. Always ensure youre either creating your own or obtaining them from legitimate sources that allow sharing and downloading. Library Check if your local library offers eBook lending services. Many libraries have digital catalogs where you can borrow Shower Door Installation Instructions eBooks for free, including popular titles.Online Retailers: Websites like Amazon, Google Books, or Apple Books often sell eBooks. Sometimes, authors or

publishers offer promotions or free periods for certain books.Authors Website Occasionally, authors provide excerpts or short stories for free on their websites. While this might not be the Shower Door Installation Instructions full book , it can give you a taste of the authors writing style.Subscription Services Platforms like Kindle Unlimited or Scribd offer subscription-based access to a wide range of Shower Door Installation Instructions eBooks, including some popular titles.

FAQs About Shower Door Installation Instructions Books

What is a Shower Door Installation Instructions PDF? A PDF (Portable Document Format) is a file format developed by Adobe that preserves the layout and formatting of a document, regardless of the software, hardware, or operating system used to view or print it. **How do I create a Shower Door Installation Instructions PDF?** There are several ways to create a PDF: Use software like Adobe Acrobat, Microsoft Word, or Google Docs, which often have built-in PDF creation tools. Print to PDF: Many applications and operating systems have a "Print to PDF" option that allows you to save a document as a PDF file instead of printing it on paper. Online converters: There are various online tools that can convert different file types to PDF. **How do I edit a Shower Door Installation Instructions PDF?** Editing a PDF can be done with software like Adobe Acrobat, which allows direct editing of text, images, and other elements within the PDF. Some free tools, like PDFescape or Smallpdf, also offer basic editing capabilities. **How do I convert a Shower Door Installation Instructions PDF to another file format?** There are multiple ways to convert a PDF to another format: Use online converters like Smallpdf, Zamzar, or Adobe Acrobats export feature to convert PDFs to formats like Word, Excel, JPEG, etc. Software like Adobe Acrobat, Microsoft Word, or other PDF editors may have options to export or save PDFs in different formats. **How do I password-protect a Shower Door Installation Instructions PDF?** Most PDF editing software allows you to add password protection. In Adobe Acrobat, for instance, you can go to "File" -> "Properties" -> "Security" to set a password to restrict access or editing capabilities. Are there any free alternatives to Adobe Acrobat for working with PDFs? Yes, there are many free alternatives for working with PDFs, such as: LibreOffice: Offers PDF editing features. PDFsam: Allows splitting, merging, and editing PDFs. Foxit Reader: Provides basic PDF viewing and editing capabilities. How do I compress a PDF file? You can use online tools like Smallpdf, ILovePDF, or desktop software like Adobe Acrobat to compress PDF files without significant quality loss. Compression reduces the file size, making it easier to share and download. Can I fill out forms in a PDF file? Yes, most PDF viewers/editors like Adobe Acrobat, Preview (on Mac), or various online tools allow you to fill out forms in PDF files by selecting text fields and entering information. Are there any restrictions when working with PDFs? Some PDFs might have restrictions set by their creator, such as password protection, editing restrictions, or print restrictions. Breaking these restrictions might require specific software or tools, which may or may not be legal depending on

the circumstances and local laws.

Find Shower Door Installation Instructions :

2012 dodge ram 1500 service manual
2007 2010 can am renegade outlander service
5th grade science quiz questions answers
2011 gl450 owners manual
2000 toyota avalon repair manual yoomai
2018 european meeting of ismpp prospectus
2004 honda shadow aero 750 owners manual
2002 ford f150 ford 5 4l heater hose diagram
6th grade mug shot sentences answers
~~25 complex text passages to meet the common core~~
5 9 b cummins 402 manual download funorno
5 pin flasher relay wiring diagram
2e engine timing belt
50 essays samuel cohen 3rd edition
4 2 solving inequalities using addition and subtraction

Shower Door Installation Instructions :

The Companion Bible: Enlarged Type Edition The text of The Companion Bible is the Authorized Version (KJV). Bullinger's ... Holy Bible: King James Version ... Companion Bible: King James Version, Burgundy ... The text of The Companion Bible is the Authorized Version (KJV). Bullinger's notes relied upon many sources from the biblical studies of that era ... The KJV Companion Bible The KJV Companion Bible from E.W. Bullinger is a classic, in-depth study Bible with extensive marginal notes on the structure of the biblical text. KJV Companion Bible, genuine leather, black This enlarged print edition of the Companion Bible with commentary by E W Bullinger is an excellent choice for the serious student of God's word. It's also a ... Companion Bible Condensed: The Complete Companion ... The Companion Bible by E. W. Bullinger (in KJV) which is an trusted in-depth personal Bible study resource for those who seek to ... King James Version (KJV). KJV The Companion Bible ENLARGED TYPE ... A classic one-volume study Bible in the King James Version. Helps include: 198 appendices including

explanations of Hebrew words and their use charts The KJV Companion Bible - LARGE PRINT The KJV Companion Bible - Large Print Edition from E.W. Bullinger is a classic, in ... The #1 Source for King James Version Bibles. Menu. The KJV Store. Search. Companion Bible-KJV The text of The Companion Bible is the Authorized Version (KJV). Bullinger's ... English. Bible Translation: King James. Page Count: 2176. Binding Color: Black. Companion Bible-KJV - by EW Bullinger (Leather ... An in-depth study Bible for those who seek to know and understand God's Word in the trusted and familiar language of the King James Version. Extensive ... The Companion Bible (Black Genuine Leather ... Includes: 198 appendices, keyed to the study notes, which include explanations of Greek and Hebrew words and their use; Charts, parallel passages, maps, ... How to Find a Sentry Safe's Factory Code & Reset the Combo How to Find a Sentry Safe's Factory Code & Reset the Combo Country Select | Lost Key or Combination Select country for requesting a key replacement and a combination recovery for your SentrySafe product with our quick-and-easy replacement and recovery ... Find Your Model or Serial Number Find Your Model/Serial Number · Identify Your Type of Safe Below · Lost Your Key or Combination? · Sign up for updates and Offers from SentrySafe. Lost Combination Once your order has been received, it can take up to 7–10 business days for processing before your replacement combo is sent to you. All replacement orders are ... How To: Open A Locked Sentry Safe If You Forgot ... How to open a locked Sentry Safe if I forgot my combination Jun 27, 2015 — There are a few ways to open a locked Sentry Safe if you've forgotten your combination. One option is to contact Sentry. Continue reading. I forgot the code to open my Sentry safe but have the key Dec 6, 2022 — I forgot the code to open my Sentry safe but have the key which fits in the lock but doe not turn. What do I do. How to Recover the Code to a SentrySafe Safe Oct 8, 2021 — Forgetting or losing your SentrySafe code doesn't necessarily mean you'll have to reprogram the safe. First, you'll need to let SentrySafe know ... All-in-One Workbook Answer Key: Grade 10 Guide students in locating appropriate texts for each activity. Answers will vary. Students' responses should show an understanding and mastery of the skills ... All-in-One Workbook Answer Key - CALA6 Jan 6, 2013 — All-in-One Workbook Answer Key - CALA6. Focus2 2E Workbook Answers | PDF Workbook answer key. 1.1 Vocabulary Exercise 3 1.4 Reading 5. Do you mind opening Exercise 6 1b What has Emma eaten? 6 cannot/can't stand cleaning 1 Answer Key: Workbook | PDF | Theft | Crime Thriller Workbook answer key B1. Unit 1 GRAMMAR CHALLENGE p6 2. 5 1 What's your name? 2 How often do. Vocabulary p4 you see them? 3 Do you like computer workbook answer key literature All In One Workbook Answer Key For Literature 7 (P) (TM) and a great selection of related books, art and collectibles available now at AbeBooks.com. Pearson Literature 8 All-in-One Workbook Answer Key ... Textbook and beyond Pearson Literature 8 All-in-One Workbook Answer Key (CA)(P) [0133675696] - 2010 Prentice Hall Literature Grade ... (image for) Quality K-12 ... grade-12-workbook.pdf Oct 13, 2016 — What question was the essay writer answering? Choose A, B, C or D. A In what situations do you think computers are most useful? B What has ... Workbook answer key Answers will vary. Exercise 2. 2. A: What's your teacher's name? 3. A: Where is your teacher from ... 12th Grade All Subjects 180 Days

Workbook - Amazon.com 12th Grade All Subjects 180 Days Workbook: Grade 12 All In One Homeschool Curriculum: Math, Grammar, Science, History, Social Studies, Reading, Life .